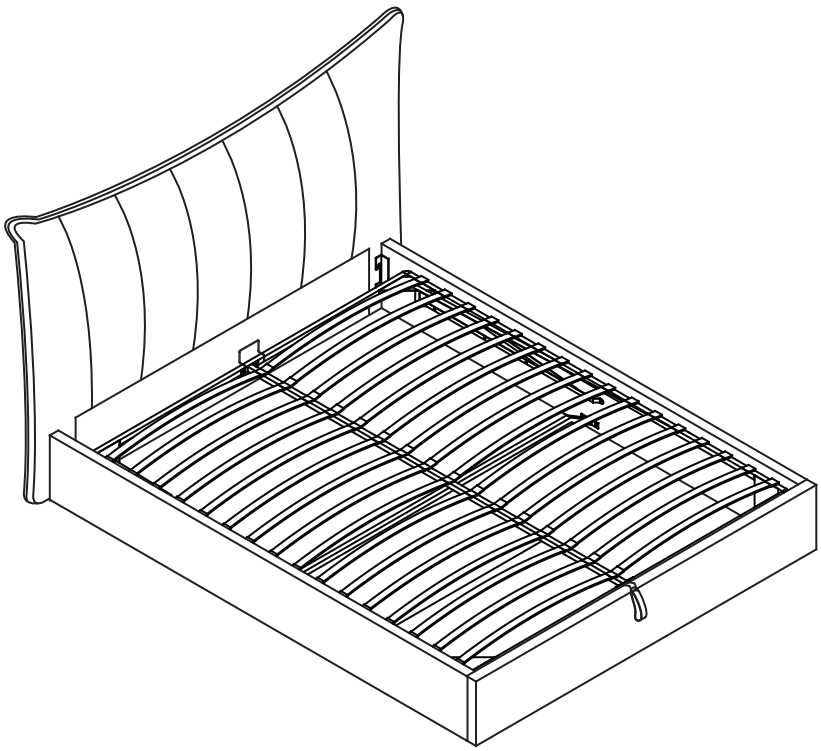

Ax20 M8x30mm	Bx20 M8x40mm	Cx4 M4x30mm	Dx20 M8	Ex16	Fx22	Gx1
Hx1	Ix1	Jx1	Kx4	Lx5	Mx6 M8x20mm	

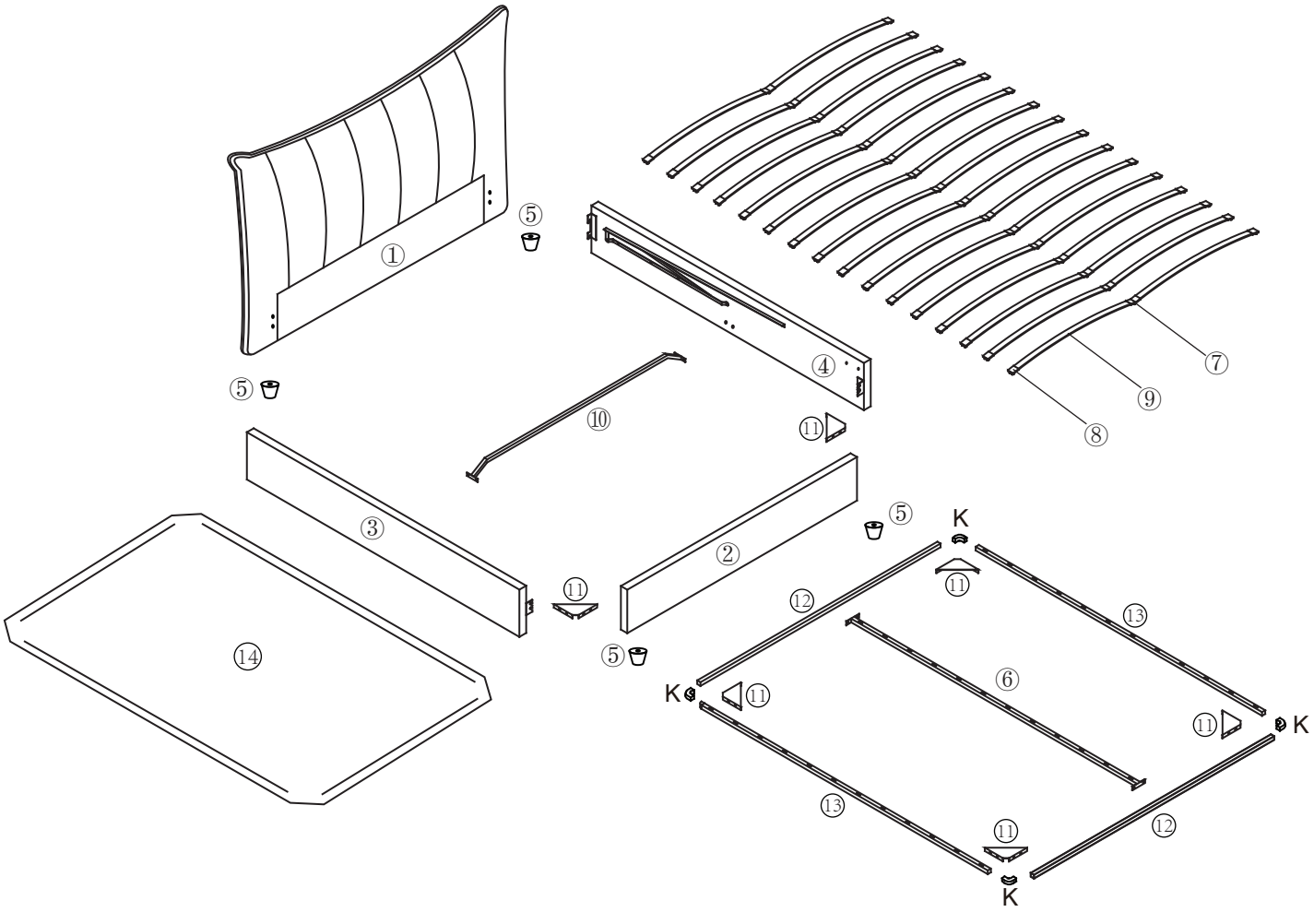

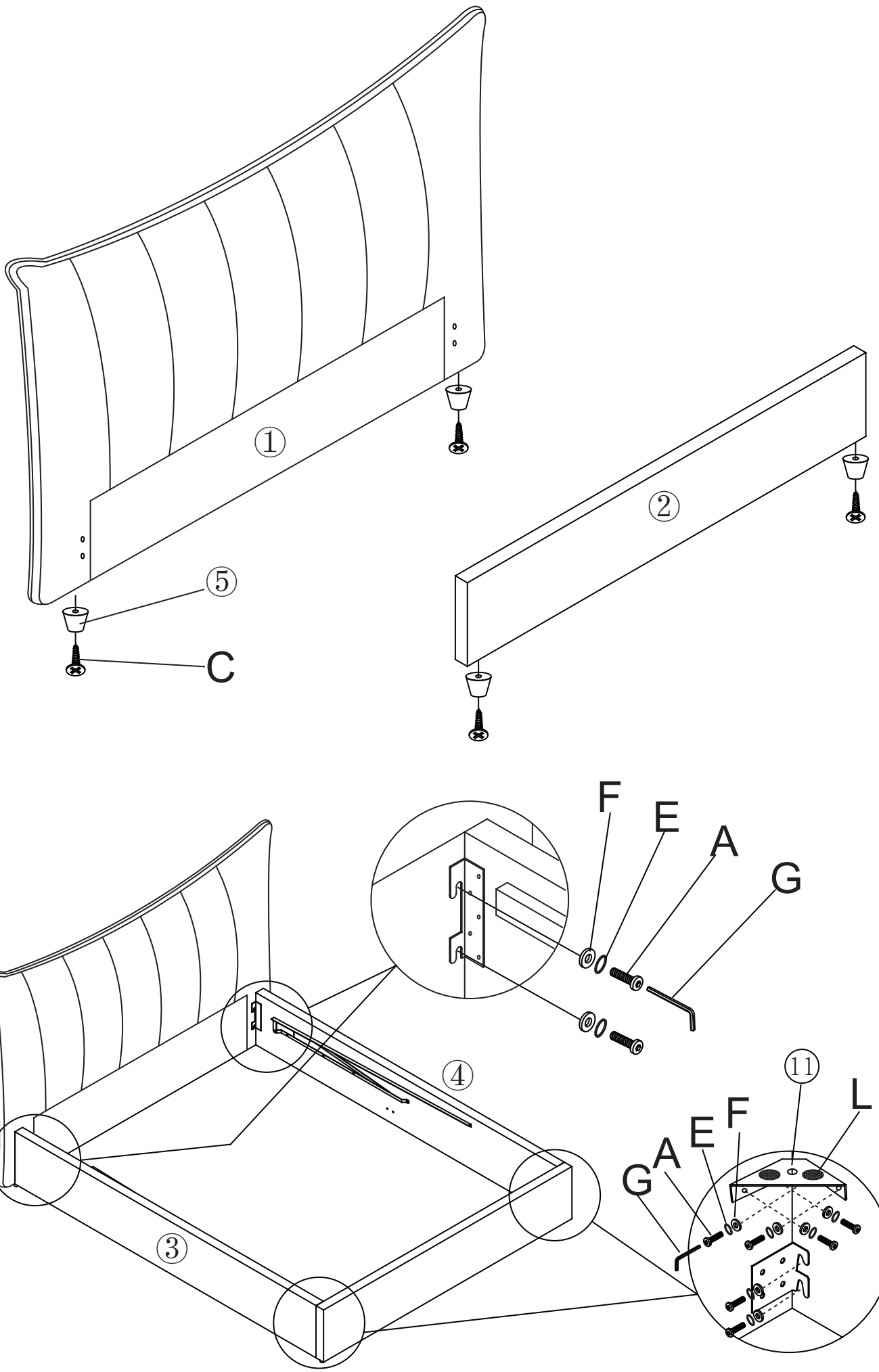
①
②
⑤
C
F
E
A
G
④
11
L
③

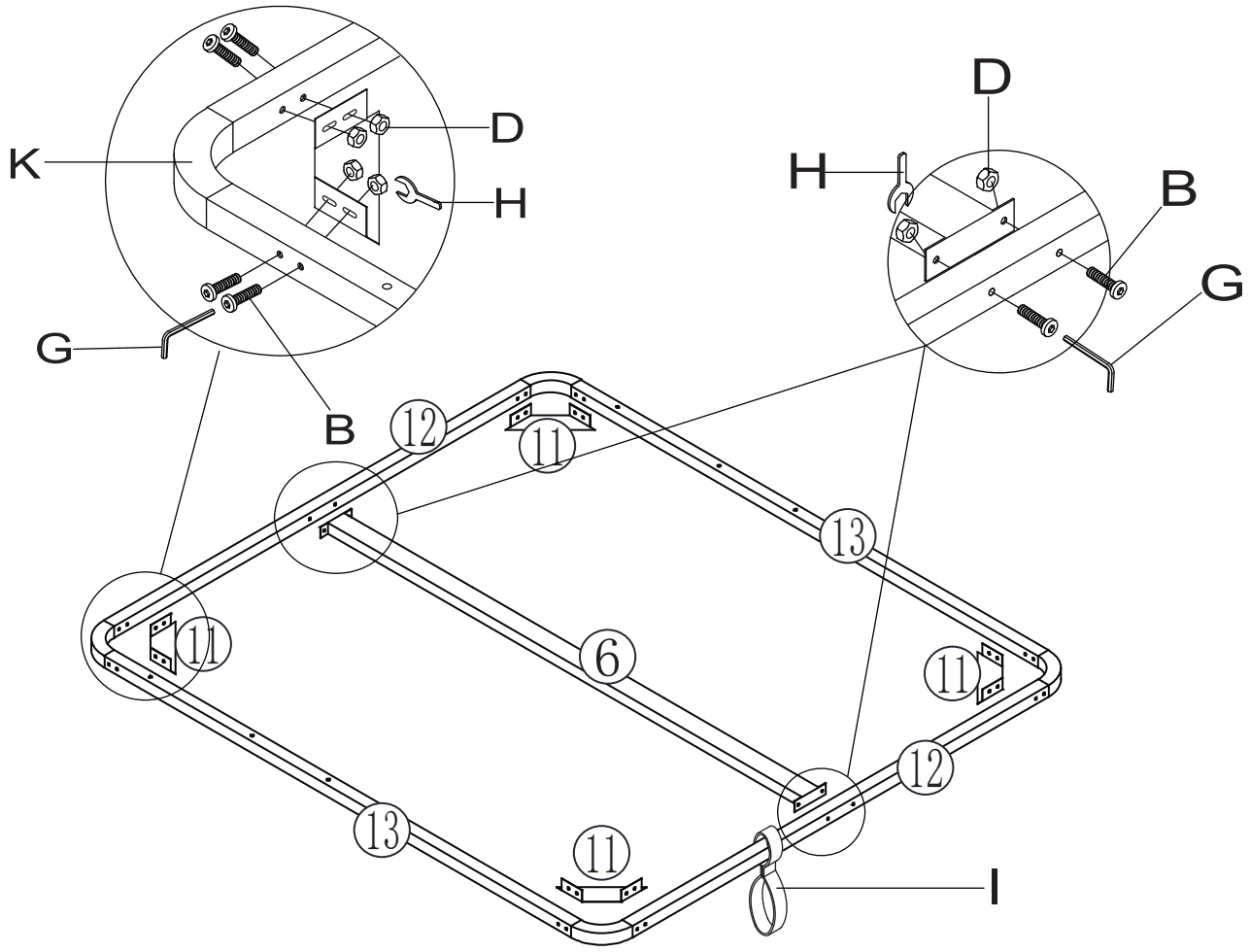
K
D
H
G
B
D
H
B
G
12
11
13
11
6
11
12
13
11
I

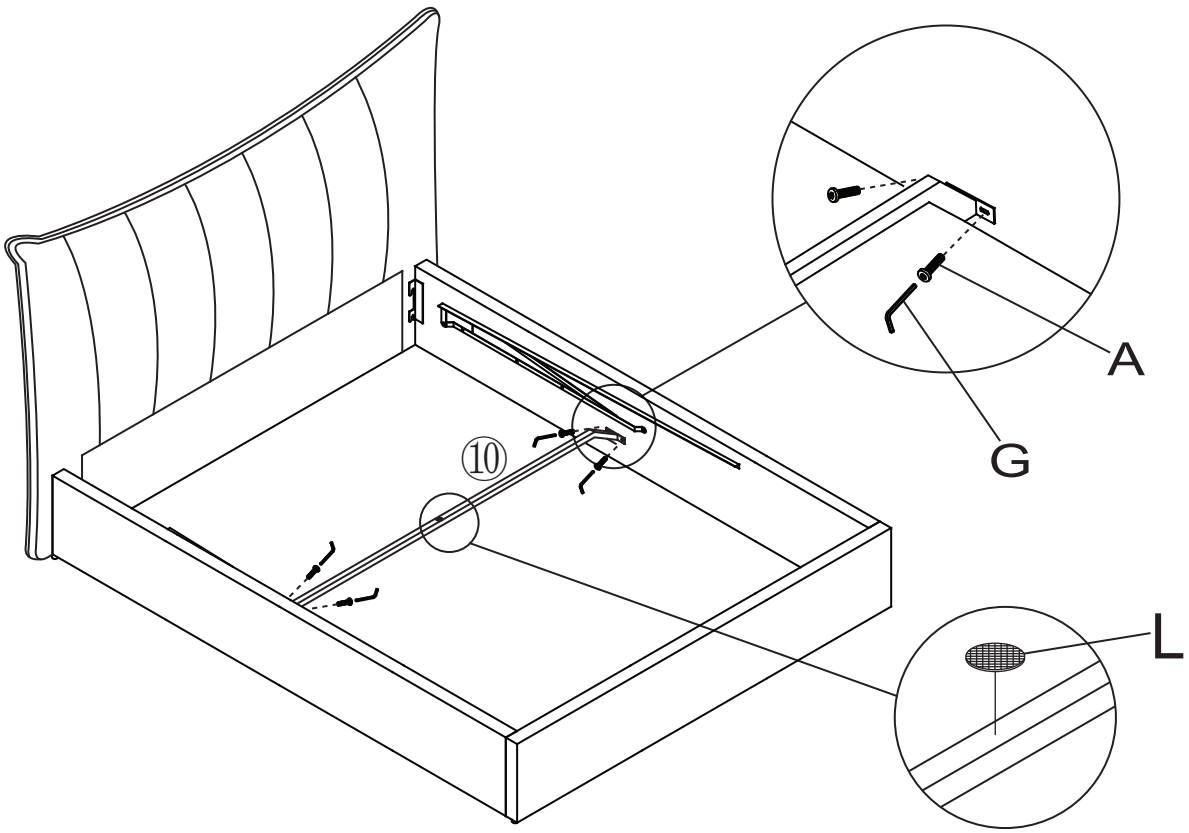
A
G
10
L

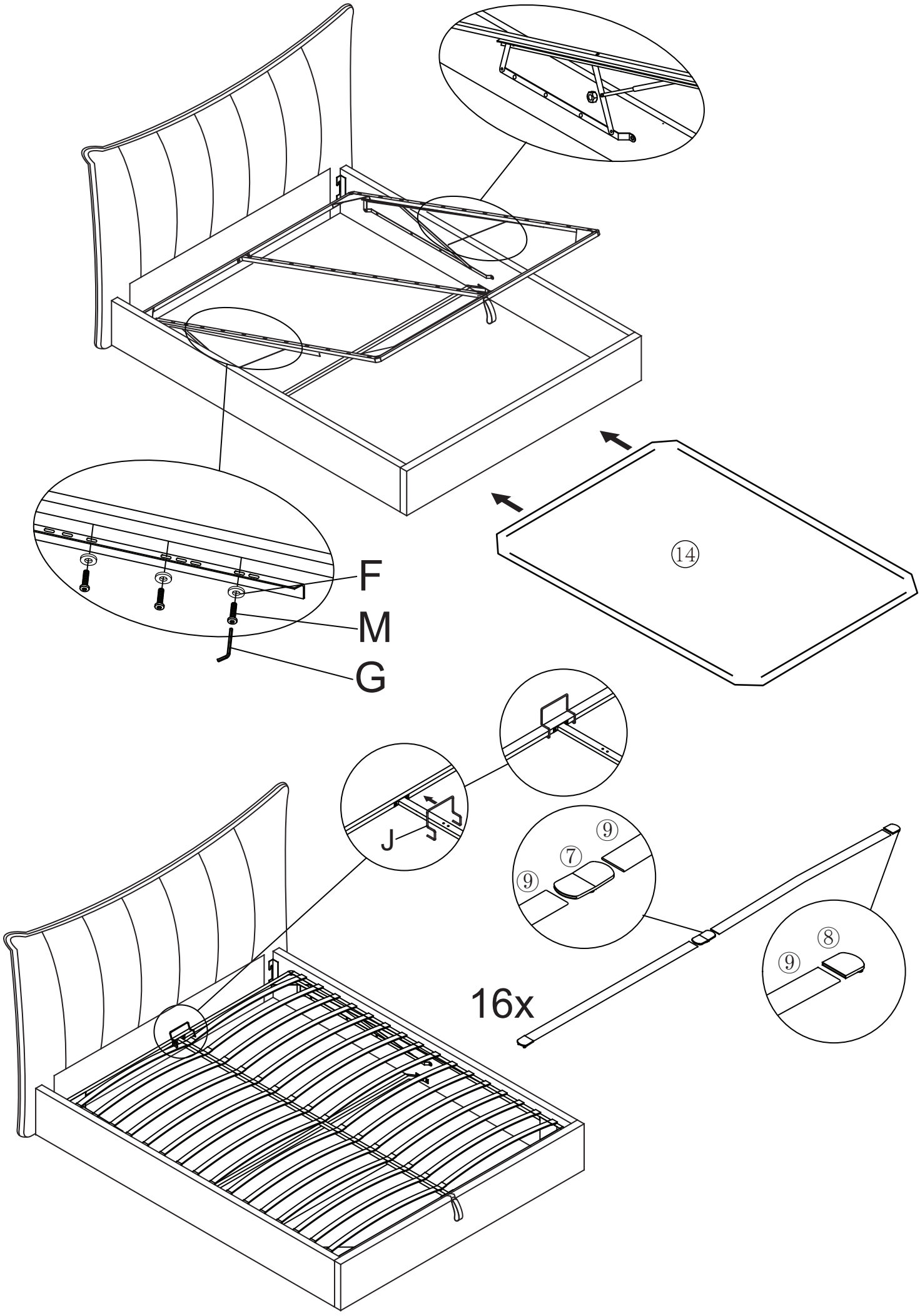
F
M
G
⑭
J
⑨
⑦
⑨
⑧
⑨
16x