ASSEMBLY INSTRUCTION

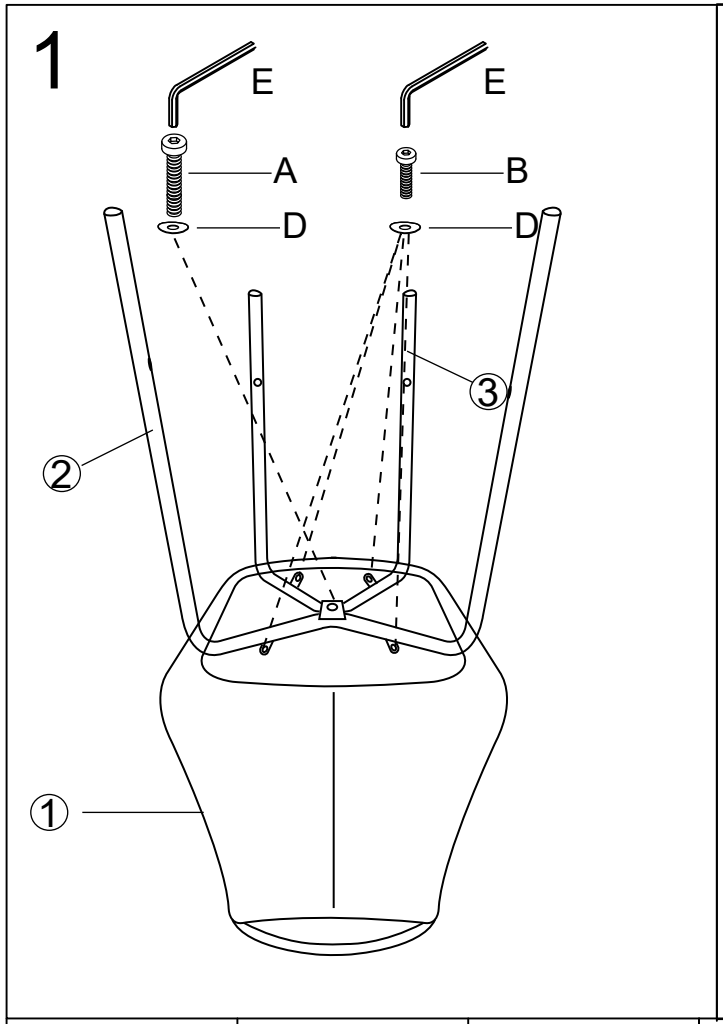

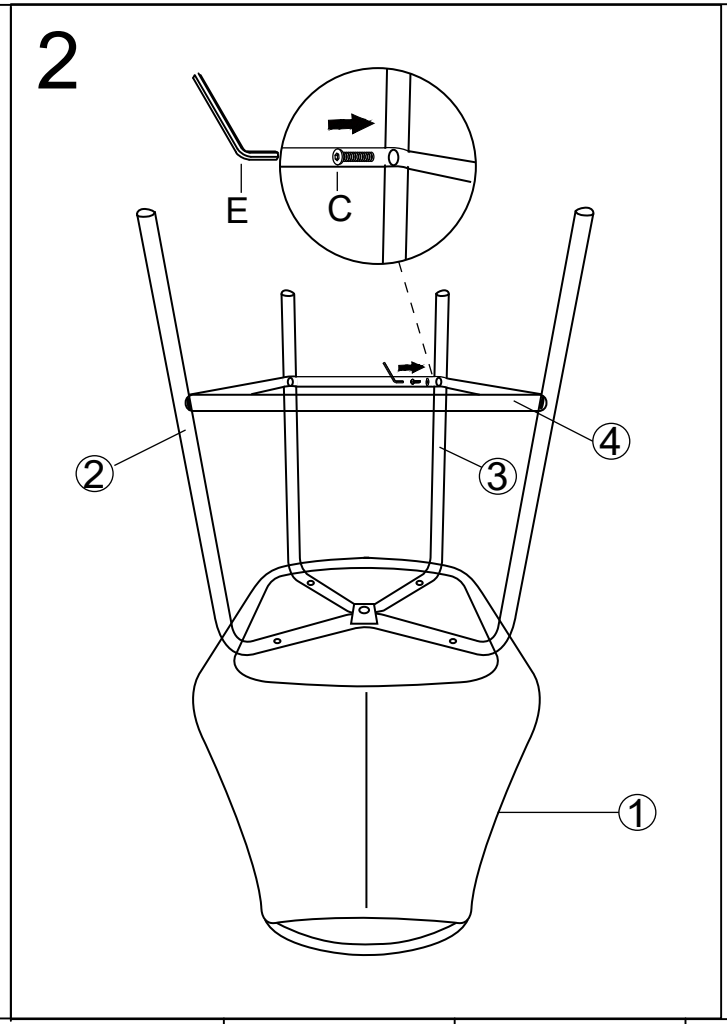

① x1	② x1	③ x1	④ x1	A x1	B x4	C x4	D x5	E x1
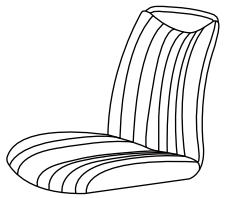			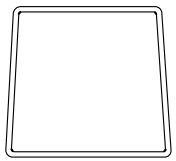	M6x35mm	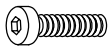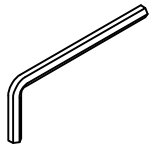 M6x18mm	M6x18mm