sofaforma

AILSON

STEP 1

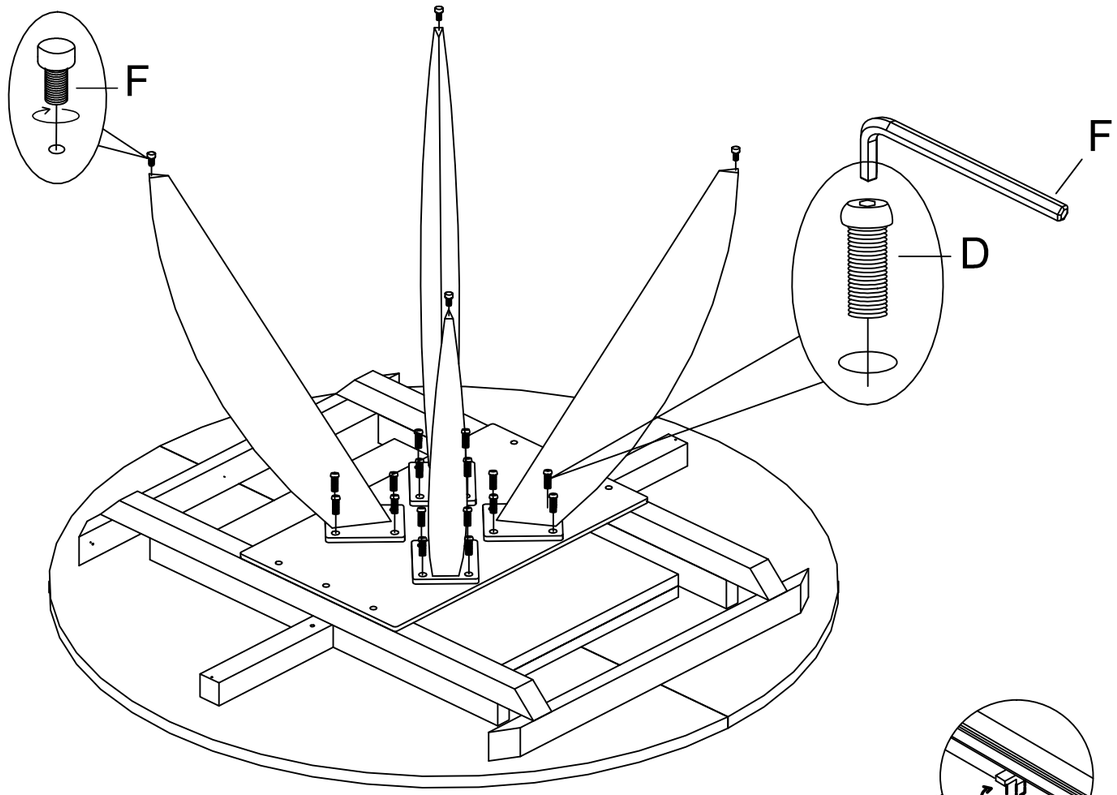

A		1
B		4
C	M8*16	16
D	#6	1
E	M8	4

STEP 2

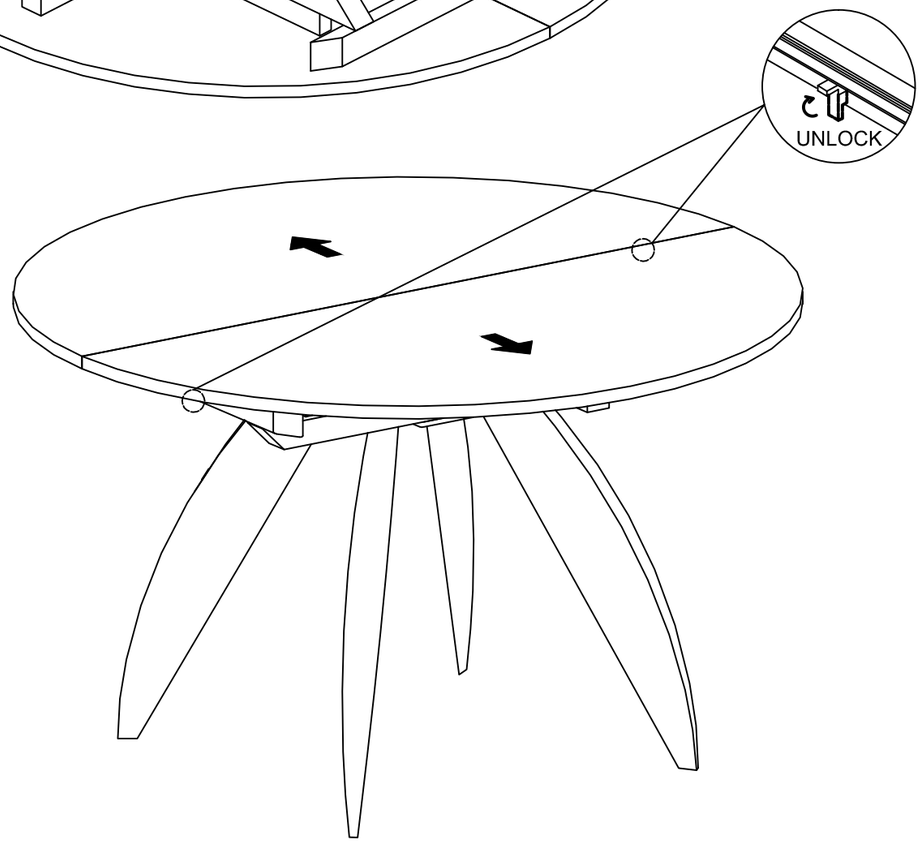
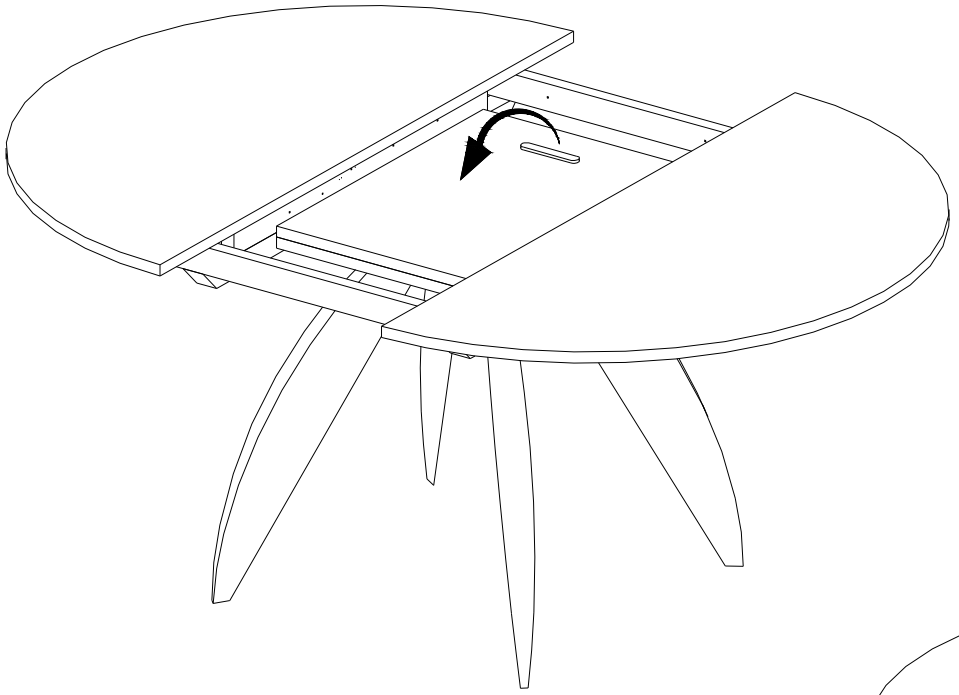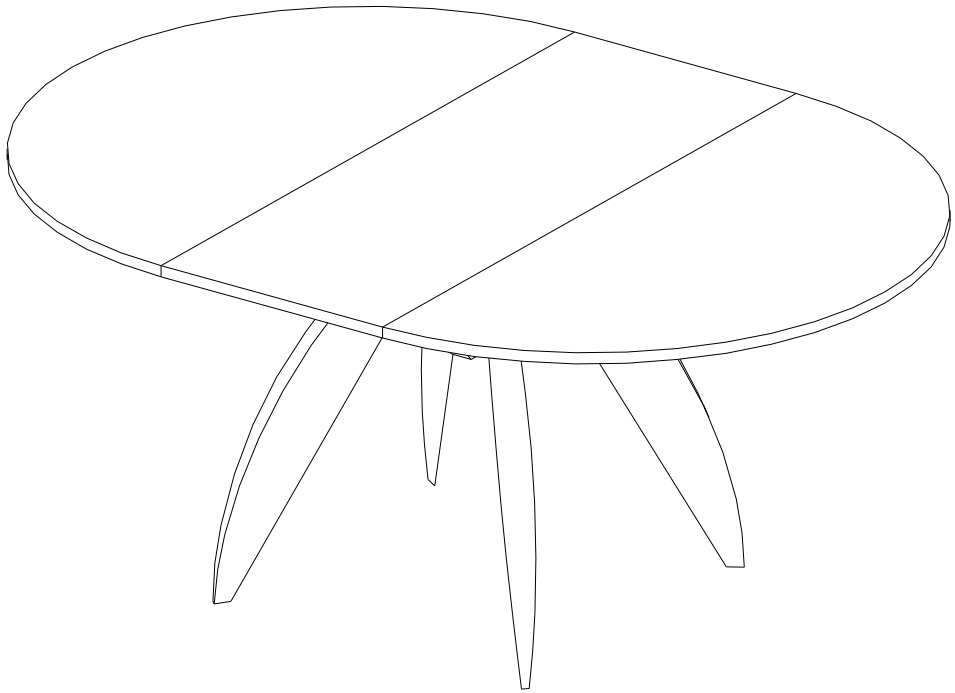
STEP 3